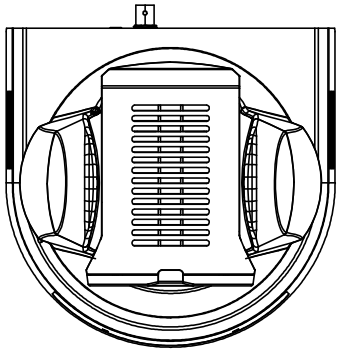

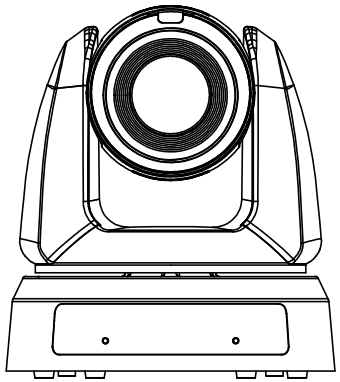

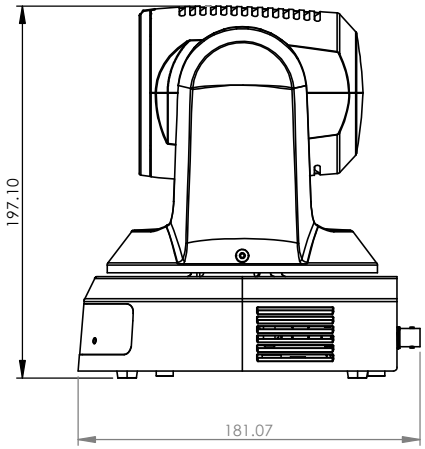
197.10
181.07

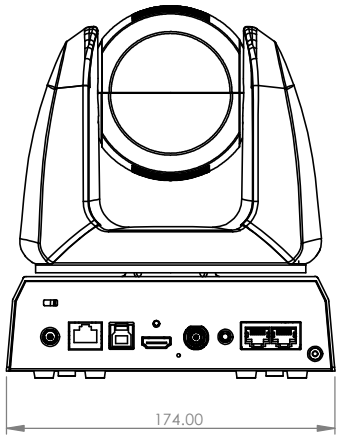
174.00

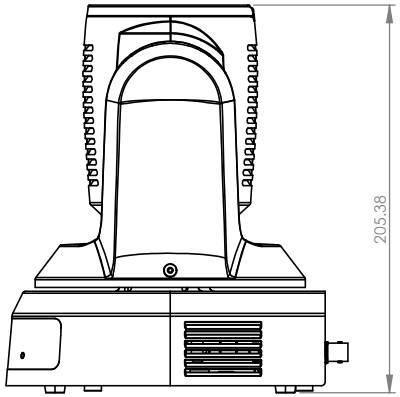
205.38

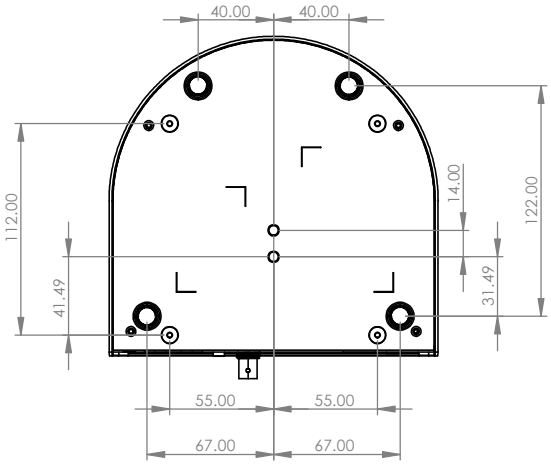
40.00
40.00
112.00
14.00
122.00
41.49
31.49
55.00
55.00
67.00
67.00

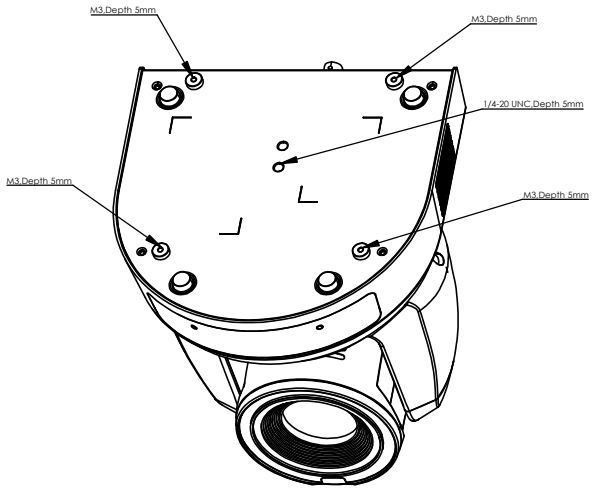
M3,Depth 5mm
M3,Depth 5mm
1/4-20 UNC,Depth 5mm
M3,Depth 5mm
M3,Depth 5mm